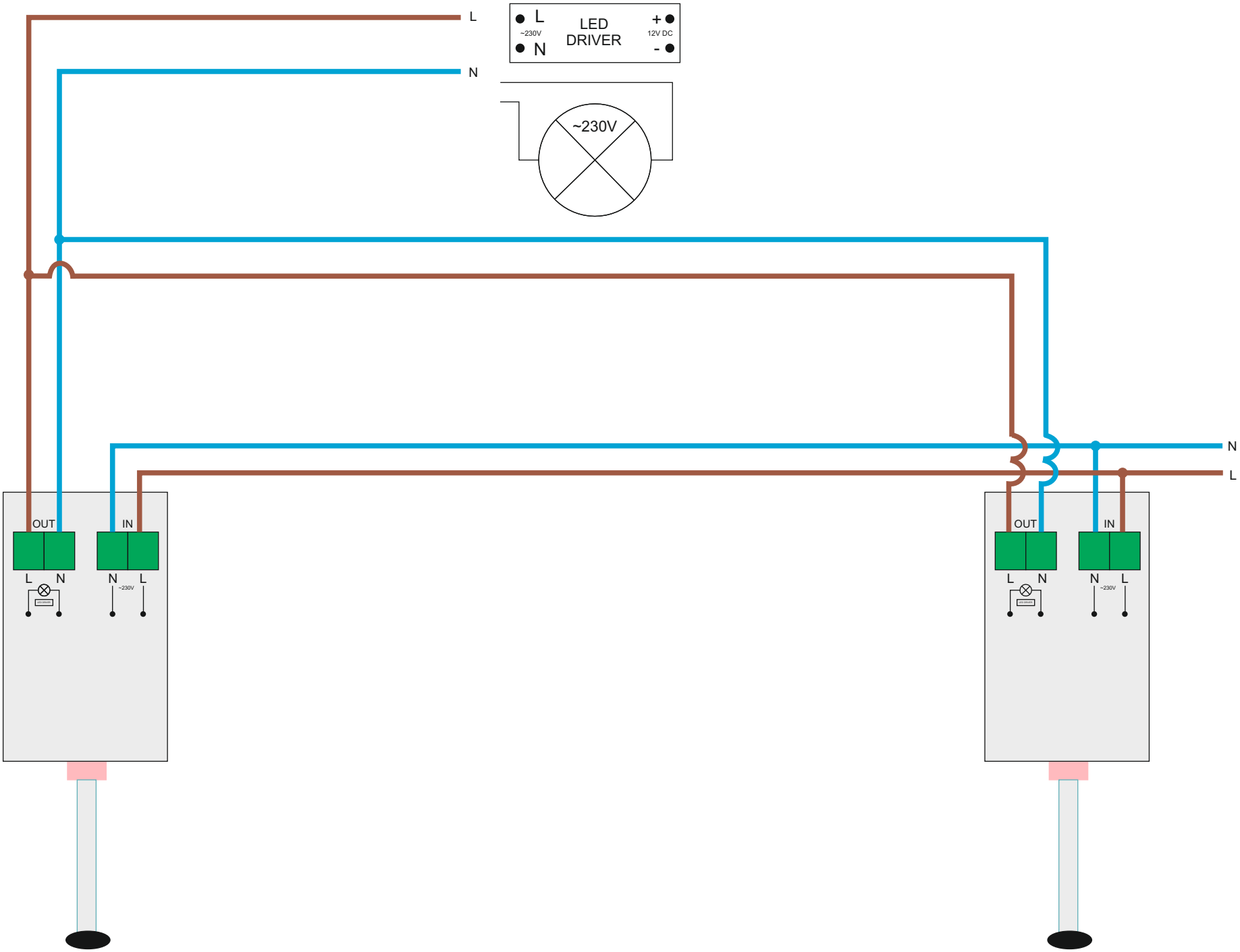
L
N
L
~230V
N
LED
DRIVER
+
12V DC
-
~230V
N
L
OUT
IN
L
N
N
L
~230V
OUT
IN
L
N
N
L
~230V